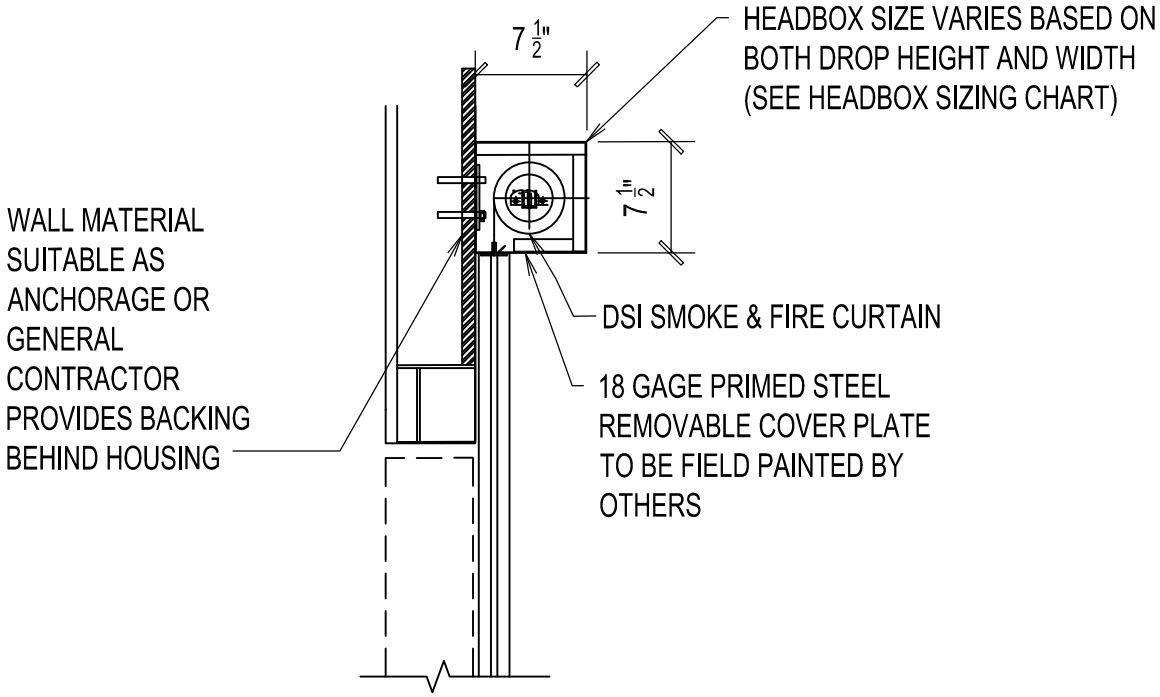

DOOR SYSTEMS

www.doorsysinc.com

DSI SMOKE & FIRE CURTAIN HEAD DETAIL – SINGLE ROLLER

SCALE: 1"=1'-0"

DRAWN: 05/2019

SINGLE ROLLER HEADBOX