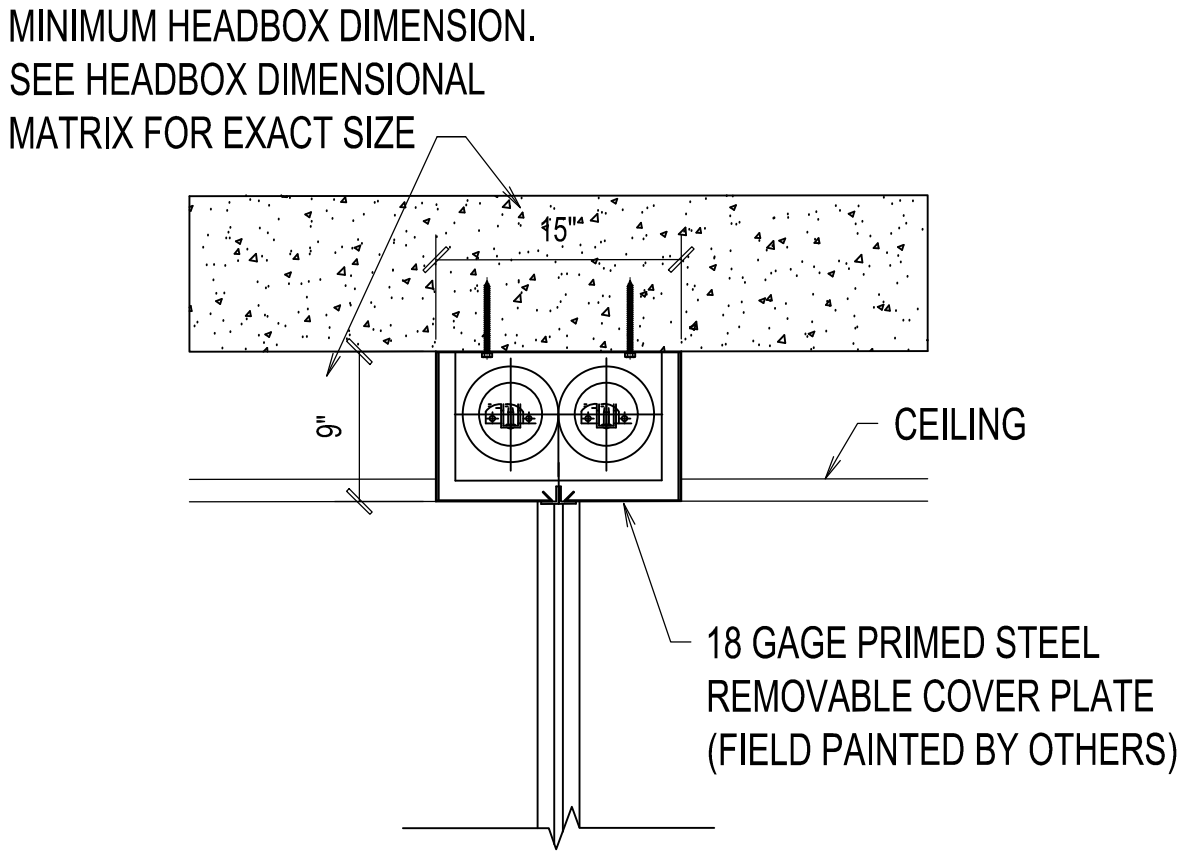

DOOR SYSTEMS

www.doorsysinc.com

DSI-HS10B SMOKE AND FIRE CURTAIN	SCALE: 1"=1'-0"	HEAD BOX OPTION #1
HEAD DETAIL OPTION 1, FLUSH TO CEILING MOUNT (TYPE 3 MULTIPLE ROLLER)	DRAWN: 05/09/23	